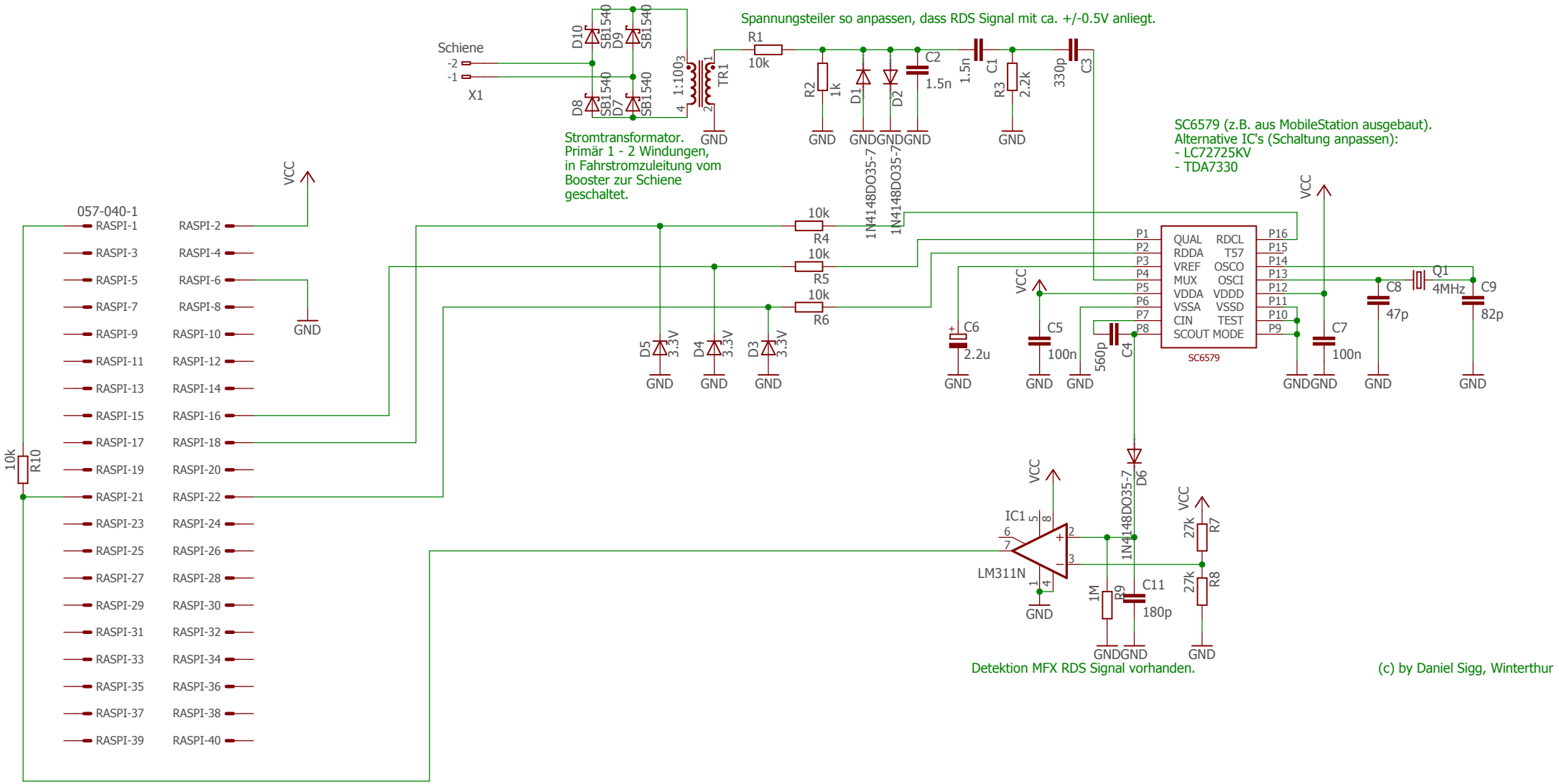


04.12.2016 15:23 f=0.98 D:\Daten\Eagle\mfxi.sch (Sheet: 1/1)